T2A63B-4 0,18KW 230/400V B3

Three-phase asynchronous motor in aluminum

Motor type	T2A63B-4 0,18KW 230/400V B3
Brand	BUSCK
Item number	83040641

Voltage V	Power kW	Frequency Hz	Current A	Speed rpm
230	0,18	50	0,96	1350
400	0,18	50	0,55	1350
460	0,21	60	0,55	1620

Duty	S1
Enclosure	IP55
Insulation class	F
Cooling	IC411 (TEFC)
Max. ambient temp.	40°C
Min. ambient temp.	-20°C
Max. temp. rise	80 K
Max altitude, masl	1000
Torque, Nm	1,27
Starting torque ratio	2
Pull up torque ratio	1,9
Pull out torque ratio	2,1
Starting current ratio	3,6
Note	IE2

Efficiency class	IE2
Efficiency, load 100%	64,7
Efficiency, load 75%	64,9
Efficiency, load 50%	60,3
Power fact, load 100%	0,73
Painting	Standard
Color	RAL 9005
Weight kg	4
Sound pressure Lp dB(A)	52
Bearing DE	6201 2RZ C3
Bearing NDE	6201 2RZ C3
Balance grade	Normal
Inertia kgm2	0,00034
Cable entries	1xM20

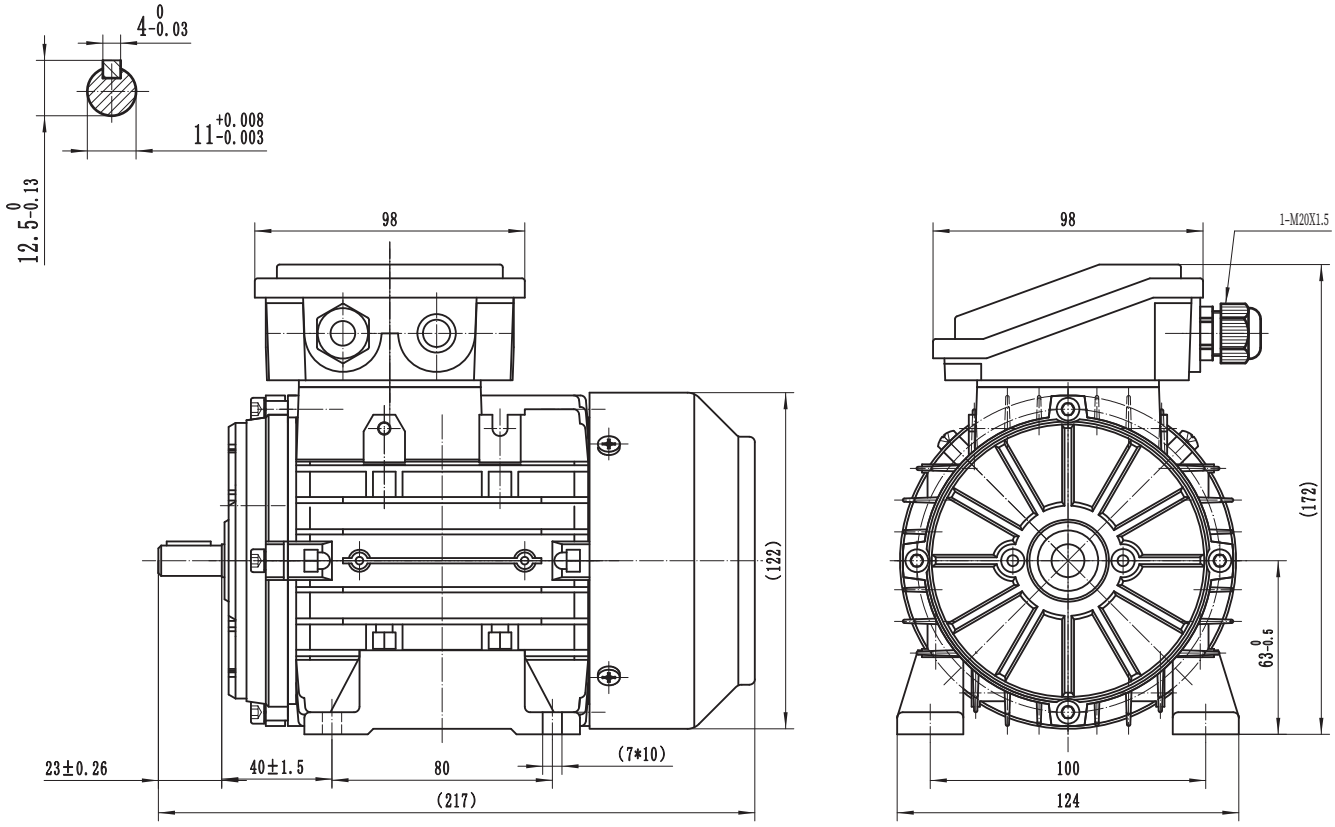

BUSCK
www.busck.eu

Busck & Co AB
Gamla Riksvägen 14
428 32 Göteborg
Sweden
556027-1990
info@busck.se

Busck & Co ApS
Postboks 108
0900 København C
Denmark
info@busck.eu

Busck AS
Skibåsen 35C
4636 Kristiansand
Norway
info@busck.no